DWG NO. -

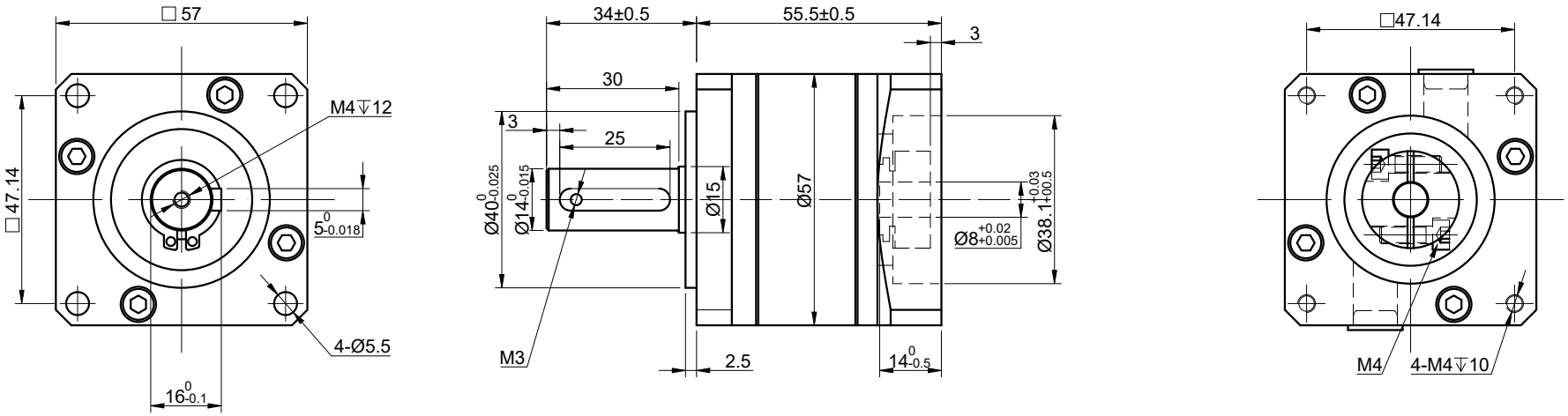

SPECIFICATION	VALUE
GEAR RATIO	5
EFFICIENCY	90%
BACKLASH@NO-LOAD(arcmin)	<=30
MAX.PERMISSIBLE TORQUE(Nm)[lb-in]	25.00[221.27]
MOMENT PERMISSIBLE TORQUE(Nm)[lb-in]	50.00[442.54]
SHAFT MAXIMUM AXIAL LOAD(N)	200
SHAFT MAXIMUM RADIAL LOAD(N)	400
GEARBOX MATCHING MOTOR'S INPUT SHAFT LENGTH (mm)	8~14
RATED INPUT SPEED(RPM)	1000
MAX. INPUT SPEED(RPM)	2000
NOISE(dB)	<=55
WATERPROOF RATING	IP54
LIFE(h)	20000
WORKING TEMPERATURE	-20°C~150°C[-4°F~302°F]

OSMTEC®

Stepper Motor Specialists

mm				PLANETARY GEARBOX
UNITS	DRN	LJ	1.7.2026	
2:3	APVD	MYX	1.7.2026	MG23-G5-D8
SCALE	SIGNATURE		DATE	