DWG NO.	-

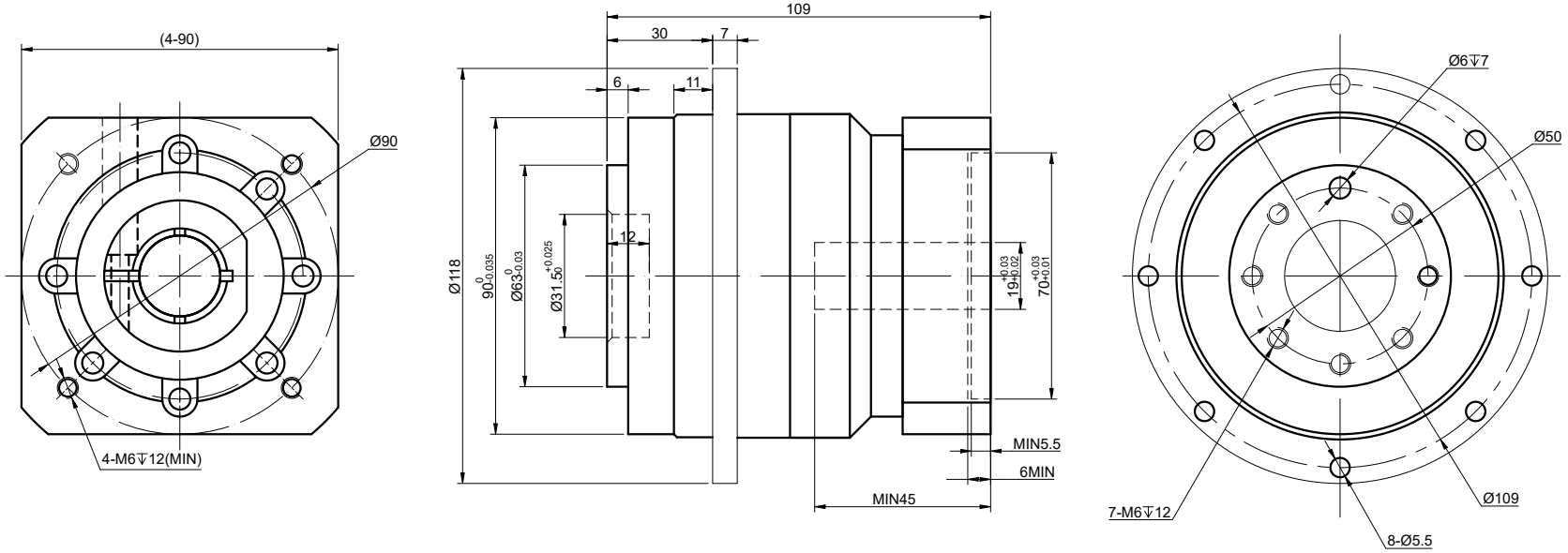

SPECIFICATION	VALUE
GEAR RATIO	10
EFFICIENCY	97%
BACKLASH@NO-LOAD(arcmin)	3
MAX.PERMISSIBLE TORQUE(Nm)[lb-in]	50.00[442.54]
MOMENT PERMISSIBLE TORQUE(Nm)[lb-in]	200.00[1770.15]
SHAFT MAXIMUM AXIAL LOAD(N)	2850
SHAFT MAXIMUM RADIAL LOAD(N)	235
GEARBOX MATCHING MOTOR'S INPUT SHAFT LENGTH (mm)	MAX45
RATED INPUT SPEED(RPM)	3000
MAX. INPUT SPEED(RPM)	6000
NOISE(dB)	-
WATERPROOF RATING	IP65
LIFE(h)	20000
WORKING TEMPERATURE	-10°C~+90°C[14°F~194°F]

OSMTEC®

Stepper Motor Specialists

mm				GEARBOX
UNITS	DRN	LJ	1.13.2026	
1:2	APVD	MYX	1.13.2026	AD90-G10-D19
SCALE	SIGNATURE		DATE	