| DWG NO. | - |
|---|---|

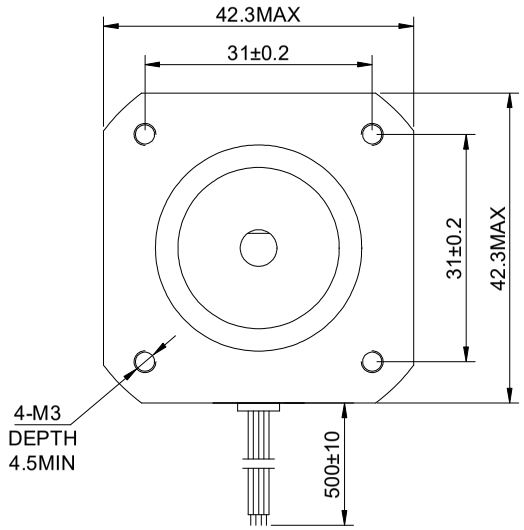


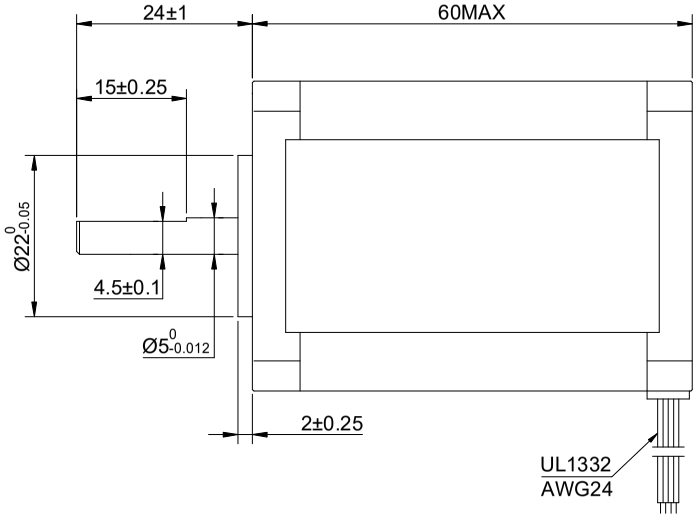


FULL STEP 2 PHASE-Ex.,WHEN FACING MOUNTING END (X)

| STEP | A+ | B+ | A- | B- | | CCW |
|---|---|---|---|---|---|---|
| 1 | + | + | - | - | ↓ | ↑ |
| 2 | - | + | + | - | | |
| 3 | - | - | + | + | | |
| 4 | + | - | - | + | CW | |

UNIT mm
GB/T 1804-M EQV.ISO
2768-1 CLASS M:

| | |
|---|---|
| <=6 | ±0.1 |
| >6~30 | ±0.2 |
| >30~120 | ±0.3 |
| >120~400 | ±0.5 |

WINDING

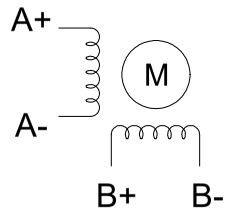


| PIN NO | BIPOLAR | LEADS |
|---|---|---|
| 1 | A+ | GRY |
| 2 | A- | BRN |
| 3 | B+ | ORG |
| 4 | B- | YEL |

| SPECIFICATION \ CONNECTION | BIPOLAR |
|---|---|
| AMPS/PHASE | 2.10 |
| RESISTANCE/PHASE(Ohms)@25°C | 1.60±10% |
| INDUCTANCE/PHASE(mH)@1KHz | 3.00±20% |
| HOLDING TORQUE(Nm)[lb-in] | 0.65[5.75] |
| STEP ANGLE(°) | 1.80 |
| STEP ACCURACY(NON-ACCUM) | ±5.00% |
| ROTOR INERTIA(g-cm²) | 148.00 |
| WEIGHT(Kg)[lb] | —— |
| AMBIENT TEMPERATURE | -10°C~50°C[14°F~122°F] |
| INSULATION CLASS | H 180°C[356°F] |
| TEMPERATURE RISE | MAX.125°C |

OSMTEC®
Stepper Motor Specialists

| | | | |
|---|---|---|---|
| mm | | | |
| UNITS | DRN | LDJ | 1.13.2026 |
| 1:1 | APVD | ZPJ | 1.19.2026 |
| SCALE | SIGNATURE | | DATE |

STEPPER MOTOR

17HS24-2104S-H