DWG NO.	-

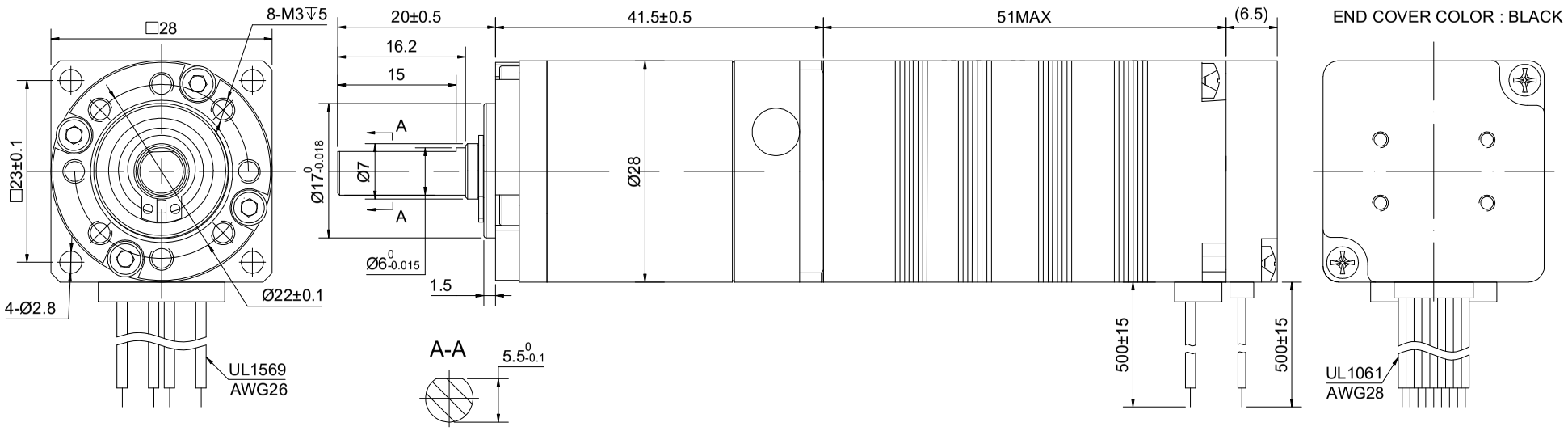

SPECIFICATION	VALUE
AMPS/PHASE	0.67
RESISTANCE/PHASE(Ohms)@25°C	12.00±10%
INDUCTANCE/PHASE(mH)@1KHz	7.50±20%
HOLDING TORQUE w/o GEARBOX(Nm)[lb-in]	0.14[1.24]
GEAR RATIO	16
EFFICIENCY	94%
STEP ANGLE w/o GEARBOX(°)	1.80
BACKLASH@NO-LOAD(arcmin)	<=20
MAX.PERMISSIBLE TORQUE(Nm)	4
MOMENT PERMISSIBLE TORQUE(Nm)	8
SHAFT MAXIMUM AXIAL LOAD(N)	100
SHAFT MAXIMUM RADIAL LOAD(N)	300
AMBIENT TEMPERATURE	-10°C~50°C[14°F~122°F]
INSULATION CLASS	B 130°C[266°F]
TEMPERATURE RISE	MAX.80°C

ENCODER CONNECTION:1000PPR(4000CPR)

LEAD COLOR	RED	BLK	BRN	ORG	BLU	GRN	YEL	WHT
DESCRIPTION	+5V	EGND	EA+	EA-	EB+	EB-	EZ+	EZ-

FULL STEP 2 PHASE-Ex.,WHEN FACING MOUNTING END (X)

STEP	A+	B+	A-	B-		CCW
1	+	+	-	-	↓	↑
2	-	+	+	-		
3	-	-	+	+		
4	+	-	-	+	CW	

UNIT mm
GB/T 1804-M
EQV.ISO 2768-1
CLASS M:

<=6	±0.1
>6~30	±0.2
>30~120	±0.3
>120~400	±0.5

MOTOR CONNECTION

PIN NO	BIPOLAR	LEADS
1	A+	BLK
2	A -	GRN
3	B+	RED
4	B -	BLU

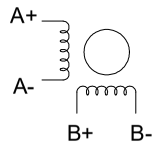

OSMTEC®
Stepper Motor Specialists

mm			
UNITS	DRN	LDJ	1.9.2026
3:2	APVD	ZPJ	1.19.2026
SCALE	SIGNATURE		DATE

PLANETARY GEARBOX MOTOR

11HS20-0674D-EGS16-AR4